European Commission

Energy sectors and the implementation of the **Maritime Spatial Planning Directive**

Maritime Affairs

Europe Direct is a service to help you find answers to your questions about the European Union.

Freephone number (*):

00 800 6 7 8 9 10 11

(*) Certain mobile telephone operators do not allow access to 00 800 numbers or these calls may be billed.

More information on the European Union is available on the Internet (http://europa.eu).

Luxembourg: Publications Office of the European Union, 2015

ISBN 978-92-79-52100-3
doi:10.2771/32493

© European Union, 2015

Reproduction is authorised provided the source is acknowledged.

Cover picture: © Silvia Baldan

Printed in Belgium

PRINTED ON WHITE CHLORINE-FREE PAPER

European Commission

Energy sectors and the implementation of the Maritime Spatial Planning Directive

Information for stakeholders and planners

Directorate-General for Maritime Affairs and Fisheries

Contents

1. Maritime Spatial Planning 7

2. Spatial needs for the energy sectors 8

3. Environmental impact and spatial competition between energy and other maritime activities 12

4. Benefits of MSP for energy sectors 15

On 14 June 2013, the European Commission organised a conference on Maritime Spatial Planning (MSP) and energy in Dublin, Ireland. On 29 January 2015, a follow-up conference was organised in Edinburgh, Scotland focusing on "Regional cooperation on energy and Maritime Spatial Planning in the North Sea".

This informational document is partly based on the conclusions drawn from the presentations and discussions that were held during the conference. Its aim is to inform the relevant industries, national authorities and NGOs about the specific characteristics, challenges and benefits of the implementation of the new MSP Directive[1] for the energy sector.

The different sections will cover the following areas:

- The first part presents what Maritime Spatial Planning is and what the objectives of the new EU Directive are.
- The second part presents the characteristics of the energy sector and its specific requirements for planning.
- The third part presents the areas of potential interaction between energy sectors and other uses of the sea.
- The fourth part presents the main benefits of MSP for the sustainable development of energy industries.

1. Directive 2014/89/EU of the European Parliament and of the Council of 23 July 2014 establishing a framework for maritime spatial planning.

1. Maritime Spatial Planning

Maritime Spatial Planning is a transparent and comprehensive process based on stakeholder involvement whose aim is to analyse and plan when and where human activities take place at sea to support sustainable development and growth in the maritime sector, applying an ecosystem-based approach. It is a cross-sectoral tool that takes into account all maritime uses and the environment. During maritime planning, all relevant stakeholders should be given the opportunity to be involved.

Marine ecosystems and human activities evolve constantly. Therefore, MSP must be a continuous process. It has to adapt to the availability of new (scientific, social and economic) information; and to changes in the baseline assessment of an area and of the different use patterns.

The Maritime Spatial Planning Directive

In July 2014, the European Parliament and the Council of the European Union adopted a new Directive (2014/89) establishing a framework for MSP. The Directive requires Member States, through their maritime spatial plans, to aim to contribute to the sustainable development of a number of sectors linked to the legal bases (environment, fisheries, maritime transport and energy). Member States may pursue other objectives (e.g. tourism and dredging). This ensures that all activities are equally covered and that all stakeholders' interests are considered.

Member States are required to transpose the Directive in their national legislation and designate the relevant authorities by 18 September 2016. The establishment of maritime spatial plans in Member States' marine waters must be achieved by 31 March 2021.

The Directive does not impose planning details or management objectives, which should be decided by Member States. However, it requires the implementation of MSP in all Member States' marine waters, as well as cross-border cooperation. This will be achieved through the establishment of common minimum requirements and a mandatory time frame.

The minimum requirements for Member States include:

1. Involve stakeholders;
2. Develop cross-border cooperation;
3. Apply an ecosystem-based approach;
4. Use the best available data and share information;
5. Take into account land-sea interaction;
6. Promote the co-existence of activities;
7. Review the plans at least every 10 years.

2. Spatial needs for the energy sectors

Oil & gas

The oil and gas sector contributes up to €64 billion GVA and 550,000 direct and indirect jobs to the European economy (EU27)[2]. Offshore oil and gas exploitation is taking place in the national waters of 11 EU Member States. It represents 90% of oil and over 60% of gas produced in Europe (including Norway)[3]. In total, there are more than 6 000 wells and over 1 000 offshore installations in operation in European waters (including Norway)[4].

Oil and gas activities are linked to the location of the resource. The characteristics of the reserves identified, the technical challenges related to the sea area (e.g. currents or wave) and the presence of pre-existing infrastructures (e.g. pipelines) will contribute to the decision to plan a project in a particular area[5]. Those activities include exploration, exploitation and decommissioning phases. Each phase will have different spatial requirements and different impacts on other uses and on the environment.

- The **exploration** phase is conducted over a short period and consists of seismic surveys and exploratory drilling. The seismic surveys are used to chart the geological composition of the seafloor in order to identify possible oil and gas reservoirs. Sound waves are bounced on the seafloor and the different feedback response time allows for the identification of the presence of potential oil and gas reservoirs. Seismic surveys occupy vast areas for a short amount of time and are also conducted in the other phases of oil and gas activities. Exploratory drilling takes approximately 2 to 3 months. Including its anchor spread, exploration rigs can occupy an area of 7 km2. Other activities to be considered in spatial planning before the exploitation phase include the construction of hydrocarbon transmission infrastructures such as pipelines[6].

- **Fixed installations** for oil and gas production occupy a smaller area over a longer period of time. Life expectancy for oil and gas platforms is of at least 25 years[7]. The type of infrastructure and the technology used will vary in function of the natural environment. A 500m safety zone should be established around the platforms under international law[8]. Also, free air space is needed to access the platforms by helicopter under international aviation regulations. The size of the obstacle free zone may vary depending on the local wind conditions and national regulations (e.g. The Netherlands have established a 5nm obstacle free zone around a helipad). Oil and gas exploitation has significant needs for coastal activities in terms of supply vessels, pipelines or infrastructures. Article 7 of the MSP Directive requires that such

2. EC 2011, EC MSP & Energy conference (2014) J. Herbertson presentation
3. SEC(2011) 1293 final, COMMISSION STAFF WORKING PAPER IMPACT ASSESSMENT Accompanying the document PROPOSAL FOR THE REGULATION OF THE EUROPEAN PARLIAMENT AND OF THE COUNCIL on safety of offshore oil and gas prospection, exploration and production activities, 2011/ENER/007
4. bid
5. Norwegian Ministry of The Environment (2013) , Integrated Management of the Marine Environment of the North Sea and Skagerrak (Management Plan) White paper
6. Ibid.
7. Ibid.
8. UNCLOS, Part V – Exclusive Economic Zone. Article 60.5. The breadth of the safety zones shall be determined by the coastal State, taking into account applicable international standards. Such zones shall be designed to ensure that they are reasonably related to the nature and function of the artificial islands, installations or structures, and shall not exceed a distance of 500 metres around them, measured from each point of their outer edge, except as authorised by generally accepted international standards or as recommended by the competent international organisation. Due notice shall be given of the extent of safety zones.

land-sea interactions should be taken into account in the establishment of maritime spatial plans.

- The **decommissioning** phase includes the sealing of the well and the removal of infrastructures. The removal of abandoned or disused offshore infrastructures is a legal requirement under UNCLOS and other regional or national legislations[9]. Derogations related to the removal of infrastructures exist for specific situations. Structures weighting more than 10 000 tonnes may be subject to derogation in regards of the technical challenges linked to their decommissioning[10].

Offshore renewable energy

In 2014, the EU 2030 Framework for Climate and Energy has reaffirmed its support to the development of renewable energy, including marine renewable energy. A new target regarding the share of renewable energy in the total consumption of EU electricity has been set at 27% for 2030 [11].

Offshore renewable energy includes energy produced from wind, wave, current, tidal, temperature or salinity sources. Those technologies are all at different development stages and relate to different offshore environments. Each renewable energy source requires specific devices, which will have different spatial characteristics.

However different, offshore renewable energy industries do face similar challenges. Production is variable and its integration in the general energy market has proved challenging, partly because of transmission issues and partly because of the difficulty in storing surplus electricity when generating conditions do not match up with consumption requirements. In order to address the problem, some solutions are being studied such as the possibility of transforming electricity into gas through electrolysis and incorporating it in gas-powered energy systems. These developments will have an impact in terms of sea space occupied that must be taken into consideration by planners. Another common challenge is access to financing. Offshore renewable energy is a high capital sector. Long-term reduction of uncertainty in planning and licensing is necessary to secure investments[12].

9. Royal Academy of Engineering (2013) Decommissioning in the North Sea
10. OSPAR Commission (2010) Quality Status Report 2010 and OSPAR Decision 98/3 on the Disposal of Disused Offshore Installations.
11. EC (2014) 2030 framework for climate and energy policies
12. DG MARE (2014), Blue Energy, Action needed to deliver on the potential of ocean energy in European seas and oceans by 2020 and beyond.

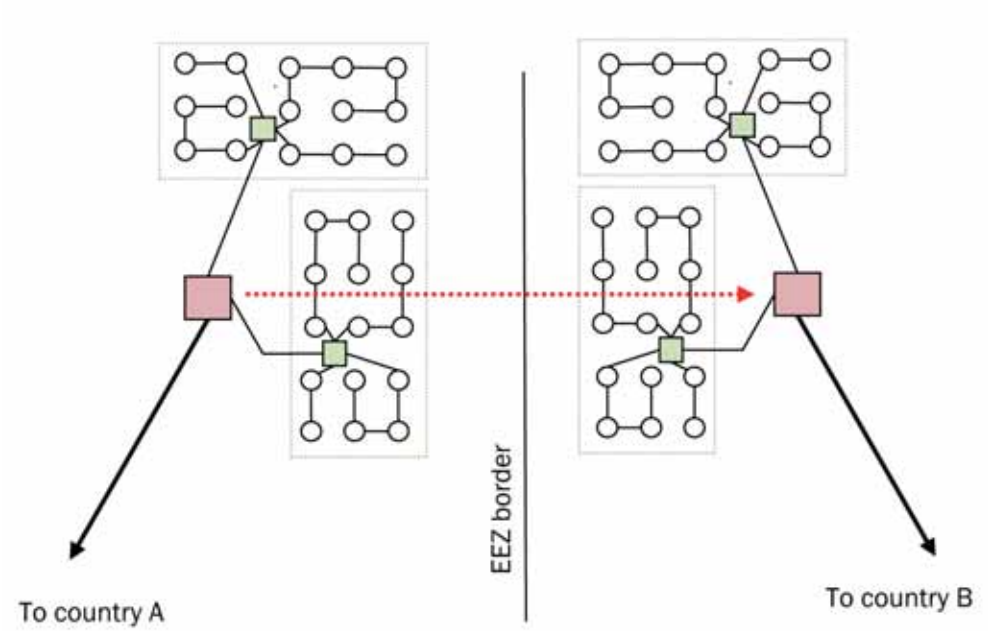

Source: Seanergy 2020 (2011)

Offshore Wind Energy

As of 1 July 2014, 2 304 offshore wind turbines from 73 wind farms in 11 countries were connected to the European electricity grid for a total capacity of 7 343 MW[13]. By 2020, the offshore wind total installed capacity is projected to be 43GW, representing 3% of EU's total electricity consumption[14].

- One wind turbine needs more or less 1km² of space in relation to another one, depending on its size[15] (6MW/km2). The life expectancy for a turbine is of 25 years, on average.[16]. Factors influencing the **location of offshore wind farms** include wind conditions, seabed suitability, the presence of available infrastructure (e.g. cables) and the instalment of new cables. Other factors affecting the location may be the presence of wrecks or other archaeological remains on the seabed[17].

Proper **port facilities** are also an important part of the logistics involved in the development of an offshore wind farm. Spatial and infrastructural needs will depend on the vocation of the port (manufacturing or mobilisation port)[18]. Characteristics for a manufacturing port (for a 5MW wind farm) include quaysides length of 200-300m, water access for vessels up to 140m with 45m beam and 6m draft and overhead clearance to sea of 100m minimum (to allow vertical shipment of towers)[19]. Access to the port should be permanent and not limited by tidal locks or other characteristics[20].

Underwater cables are necessary to transfer the energy produced by the wind farm to land. The type of cable and protection measure chosen will depend on the distance to shore from the wind farm, the voltage and transmitted power capacity, the water depth[21], the seabed characteristics and

13. EWEA, (2014) The European offshore wind industry - key trends and statistics 1st half 2014
14. DG MARE (2014), Blue Energy, Action needed to deliver on the potential of ocean energy in European seas and oceans by 2020 and beyond.
15. Norwegian Ministry of The Environment (2013) , Integrated Management of the Marine Environment of the North Sea and Skagerrak (Management Plan) White paper.
16. Ministry of Infrastructure and the Environment, The Netherlands (2014) North sea 2050 spatial agenda
17. Ibid
18. EWEA (2011) Wind in our Sails, The coming of Europe's offshore wind energy industry
19. The Crown Estate and BVG associates (2010) A guide to an Offshore Wind Farm.
20. EWEA (2011) Wind in our Sails, The coming of Europe's offshore wind energy industry
21. O. Anaya-Lara et al. (2014) Offshore wind energy generation : control, protection, and integration to electrical systems, Chichester, West Sussex : John Wiley & Sons Inc.

on threats to the cable integrity in the area[22]. In water depth up to 1 200m, underwater cables will tend to be buried to avoid being damaged by anchors and fishing gears[23]. Regulatory measures restricting certain uses may be implemented to protect the cables. Planning of offshore wind farms and submarine cables or grids must be coordinated. Energy connection between two wind farms may also be complicated by the overlying of cables[24].

- Once the wind farm is built, **operation and maintenance** is the main activity. Factors influencing the costs for an optimal operation and maintenance strategy include the distance from onshore facilities, the number and size of the turbines, and the offshore substation design. Distance from onshore facilities is one of the most influential factors on the costs of offshore operation and maintenance[25].

- Instead of **decommissioning** the infrastructure at the end of its working life, it may make more economic sense to re-use the area and replace the turbine: the energy resource is renewable and the infrastructures to transform and bring electricity onshore will already be there. The different parts of a wind farm have different life spans, but transformers and cables have a life time expectancy of about 40 years[26].

Land-sea interactions need to be identified and planning processes should be developed to accommodate features such as port and grid infrastructures, cabling, and operation or maintenance services.

Ocean Energy

Wave and tidal are the other most developed types of offshore renewable energy, with 250MW installed wave and tidal capacity in the EU. About 2GW of projects are currently being developed, mainly in France, UK and Ireland[27]. Each technology has a different impact and different spatial requirements. Wave energy depends on wave height, speed, length and on the density of the water. Tidal energy is generated by the difference in surface height in a dammed estuary, a bay or a lagoon[28]. Ocean energy can also be generated by the difference of water temperature according to the depth or by difference in salinity between salt and fresh waters. The configuration of ocean energy devices has an impact on the configuration of mooring and cabling devices and therefore on the planning of the area.

Ocean renewable energy is still in its infancy and there is no technology convergence for the moment. Sufficient space for testing grounds must be available for the development of ocean energy from pilot projects to full scale devices. Research is also needed to reach a better understanding of the impact of those activities on fish, mammals and the seabed. Flexibility should be taken into account in the revision cycles of spatial planning in order to integrate technological development and the consolidation of the sector.

22. OSPAR Commission (2009) Assessment of the environmental impacts of cables
23. Ibid
24. SEANERGY 2020 (2011) Offshore Renewable Energy and Maritime Spatial Planning, Recommendations for Adaptation and Development of Existing and Potentially New International Marine Spatial Planning Instruments.
25. 3E (2014) Technical, Financial and O&M Aspects
26. Ibid.
27. DG MARE (2014), Blue Energy, Action needed to deliver on the potential of ocean energy in European seas and oceans by 2020 and beyond.
28. http://www.tidallagoonswanseabay.com/

3. Environmental impact and spatial competition between energy and other maritime activities

The current growth of traditional maritime sectors such as shipping, and the development of new maritime industries are not always spatially compatible. Increased competition for sea space may lead to conflicts between sectors and to negative cumulative impact on the environment. MSP helps bring stakeholders and authorities together to agree on sustainable spatial management and planning of sea areas.

The environmental impact of energy sectors

An important impact of offshore energy on the marine environment takes place during the construction and the decommissioning phases. During both phases, local destruction of marine habitats may be caused by the installation or removal of the related infrastructures (e.g. wind turbine, well, platform, etc.). Increased

turbidity, noise and vibrations may also affect the distribution of fish populations and marine mammals.

Noise produced by human activities (e.g. seismic activities or pile-driving for the installation of wind turbines) may cause behavioural changes or physical damage to marine mammals or fish populations. The extent to which behavioural changes can be noticed will vary depending on the species' sensitivity to noise and the physical characteristics of the area affecting sound propagation (water depth, sediment type, water temperature, etc.[29]). Physical damage, including auditory damage, damage to fish eggs or larvae and physical injuries, may also occur in close vicinity of certain activities. The impact of human activities can be reduced through mitigation measures such as: the reduction of noise levels, the gradual increase of sound levels (soft starts), the establishment of safety zones and the establishment of temporal and spatial restrictions in certain areas[30].

During the operational phase, offshore wind farms may affect bird and bat migration patterns. They can be responsible for greater numbers of bird strikes and injuries or produce a barrier effect which results in birds changing their migration path in order to avoid the farm[31]. Conflicts between the oil industry and the protection of the marine environment are also linked to the risk of oil spills. The risk is determined by the probability of occurrence of an oil spill, its influence area and the presence of vulnerable and/or valuable species and/or habitats[32].

Offshore energy infrastructures can create artificial reefs. In soft bottom areas, this modifies the ecosystem by offering a new hard bottom habitat. However, artificial reefs are often beneficial, by increasing biomass in specific areas. They may also serve as shelters for fish by restricting other activities (e.g. fishing) in the infrastructure safety zone[33].

Energy and maritime transport

The growth of the offshore renewable energy sector and of the number of fixed offshore infrastructures increase potential risks to the safety of navigation for the shipping sector. Increased risk is especially related to higher traffic density and visual limitations.

The development of offshore energy increases numbers of support and service vessels sailing to and from the infrastructure sites. This is most intense during the construction phase but operational and maintenance activities also increase maritime traffic, which may include the crossing of designated shipping lanes. Traffic density and displacement of other activities may be caused by restricted access to sea space related to offshore wind farms. Further hazards are related to radar shielding and reduced visibility potentially caused by wind farms. Navigational restrictions linked to the development of the offshore energy can also increase costs and the environmental impact of maritime transportation. This may happen if the rerouting of vessels results in longer distance of navigation[34]. A safety zone of at least 500m should exist between wind farms and shipping lanes.

Such effects should be fully taken into account in the planning process and discussed between stakeholders.

Energy and fisheries

Competition between the offshore energy and fishing sectors is mostly linked to spatial restrictions and displacement effects on fishing vessels and fish populations. Different management measures already exist:

- Fishing activities are generally not limited by safety zones during the construction of energy infrastructures;

29. H. Bailey and al. (2010) Assessing underwater noise levels during pile-driving at an offshore windfarm and its potential effects on marine mammals, Marine Pollution Bulletin, Vol. 60, p. 888-897.
30. R. Compton and al. (2008) A critical examination of worldwide guidelines for minimising the disturbance to marine mammals during seismic surveys, Marine Policy, Vol 32, Issue 3, p. 255-262.
31. RSPB (2012) RSPB guidance on the use of bird data in marine planning
32. Norwegian Ministry of The Environment (2013) , Integrated Management of the Marine Environment of the North Sea and Skagerrak (Management Plan) White paper.
33. Ospar Commission (2010) Quality Status Report 2010 .
34. EC MSP & Energy conference (2014) J. Dolan Presentation

- During the operational phase, partial or complete fishing restrictions may apply to specific activities or zones depending on national regulations;
- Restrictions regarding gear types may also apply in order to protect submarine cables or pipelines transmitting the energy produced to the onshore consumption centres;
- All vessels, including fishing vessels, must adhere to restricted navigation requirements in the 500m security area around offshore infrastructures (this does not include cables and pipelines).

Spatial competition can also exist between fisheries and the oil and gas sector regarding seismic survey activities. Surveys are done for short periods of time during all phases of offshore oil and gas activities. The sound waves used to gather information on the sub seabed may affect fish populations and fishing activities[35].

Energy and tourism

Offshore infrastructures may limit access to sea space for leisure purposes (e.g. sailing and other water sports)[37]. National regulation varies regarding partial or complete restrictions during the operational phase of offshore wind farms or oil and gas activities. Conflicts with the tourism industry are also related to changes to the "seascape", when viewed from land or from a ship, e.g. a cruise vessel.

Public acceptance is higher with increased distance from shore of the infrastructures. It is estimated that large scale offshore wind farms will be visible from the shore from a distance of 20 km for 125m high turbines[38].

Norway: seismic surveys and fishing activities[36]

Seismic surveys have been a source of conflict between the petroleum and fisheries industries. Since 2012, a number of measures have been adopted in order to reduce the conflicts between the two sectors.

The main conflicts were related to the displacement of fish linked to the "scare effect" of seismic surveys. Cooperation between the two industries has led to modifications in seismic survey activities and in sectoral regulations. Pilot projects (2012-2013) to plan seismic survey activities according to the spatial and temporal distribution of fish populations have also resulted in conflict reduction.

Another measure adopted was to extend the seismic survey activity period allowing for more flexibility for the industry. By starting seismic activities earlier, more surveys could be done before the beginning of the mackerel landing season, reducing conflicts between the two activities.

35. Norwegian Ministry of The Environment (2013) , Integrated Management of the Marine Environment of the North Sea and Skagerrak (Management Plan) White paper.
36. Ibid.
37. EC MSP & Tourism conference (2014) C. Albrecht presentation
38. Danish Energy Authority (2007) Future offshore wind power sites 2025.

4. Benefits of MSP for energy sectors

Spatial synergies

Synergies may be developed between the energy sector and other uses, but also between the different types of energy production at sea (wind-tidal-wave):

- Multi-use is facilitated by MSP when the planning for all activities is considered at the same time. A good example is the combination of aquaculture and wind farms when the substructure of wind farms located close to the coast can be used for aquaculture purposes. Due to issues related to safety, research is still being conducted to consider allowing fishing vessels and recreational sailing inside wind farm areas.

- Synergies could be developed between wave energy farms and aquaculture or shore defence, where wave energy devices help in breaking the waves and limiting damage to offshore or coastal installations. Anchoring systems could also be shared, e.g. with tidal energy devices[39].

- Depleted gas fields could be suitable CO2 storage locations or could be ground source heat reservoirs for geothermal electricity generation[40].

- Offshore wind farms can increase local biomass. Such sites can be developed in synergy with the establishment of protected areas. Current research is looking into the benefits of offshore wind farms in regenerating fish stocks.

To achieve such spatial synergies, it is essential that all long-term options for multiple potential uses are presented at an early stage in the planning process and discussed thoroughly with

39. Ministry of Infrastructure and the Environment, The Netherlands (2014) North sea 2020 spatial agenda.
40. Ibid

stakeholders. Adding other uses within existing situations or after the realisation of a project is often difficult[41].

Synergies between offshore wind farms and tourism

Contrary to perceptions that wind farms "spoil" coastal scenery and may affect tourism, offshore wind farms can bring benefits to local touristic activities when properly planned together. Interest in offshore wind farms can be developed into touristic products creating a new market niche for coastal communities. Wind farms can include a number of opportunities for coastal and maritime tourism, which in return increase public acceptance and play an educational role regarding renewable energy production and sustainable energy use[42].

Information centres, observation platforms and boat tours should be considered at an early stage as part of the wider planning issues for wind farms.

An example of such synergies between the offshore wind and tourism sectors is the Scroby Sands wind farm located in the United Kingdom at 2.5 km from the east coast. The wind farm was one of the first to be operational in the UK (2005) and consists of 30 turbines with a capacity of 2MW[43]. A visitor information centre[44] was created, which welcomes around 35 000 visitors annually (2011)[45]. Seasonal boat tours take place to observe the wind farms and also local marine mammals.

Certainty and consistency

Energy sectors, and especially emerging renewable energy activities, need policy certainty and a reduction of planning uncertainty. Maritime Spatial Planning, involving all stakeholders and closely linked to licensing mechanisms, brings a long-term legal certainty that gives investors the clarity they need to carry out the necessary investments. By encouraging closer coordination between authorities and establishing clear priorities for the management of sea areas, MSP clarifies the overall policy and business climate.

Grid development and grid interconnection especially is lagging behind targets[46]. Offshore wind energy needs to operate in a well-planned maritime setting where grid investments are facilitated and link effectively to land. Offshore wind energy will not be able to reach its full potential without the development of an electricity grid that delivers the power produced at sea to the main demand centres on land. Long-term and strategic planning can help grids being developed in clusters that connect offshore wind energy together instead of in radial connections[47].

The North Sea Countries' Offshore Grid Initiative[48]

The development of offshore wind farms depends on grid infrastructure to be able to deliver the energy onshore. The North Sea Countries' Offshore Grid Initiative relies on the cooperation between 10 countries to facilitate the coordinated development of a possible offshore grid. This would allow for the more efficient transmission of energy and consolidates the European energy market. Identifying dedicated areas for the construction of an offshore grid sends a clear signal to the industry and helps secure investors by resolving one of the bottlenecks challenging the development of offshore wind farms.

Potential advantages identified include the increased operational flexibility provided by the meshed network with greater resilience for individual offshore wind power plants. In addition, reduced environmental impact should be expected with the potential for larger cables and fewer landing points.

41. Ibid
42. MSP conference (2014) C. Albrecht presentation.
43. Greater Yarmouth Tourism, Wind Farms (http://www.great-yarmouth.co.uk/things-to-do/wind-farms.aspx).
44. http://www.eon-uk.com/481.aspx
45. Stiftung OFFSHORE-WINDENERGIE (2013) The Impact of Offshore Wind Energy on Tourism, Good Practices and Perspectives for the South Baltic Region.
46. Ibid.
47. South Baltic OFF.E.R (2013) Offshore Wind Energy In the South Baltic Region- Challenges & Opportunities
48. NSCOGI- WG1- Grid Configuration (2012) The North Sea Countrie's Offshore Grid Initiative- Initial Findings

Cross-border cooperation

Directive 2014/89/EU requires that Member States bordering marine waters shall cooperate with their neighbours across the marine region concerned when establishing their maritime plans (Article 11). Cooperation aimed at sharing knowledge, skills development and experience is crucial for the future development of offshore wind energy in particular, and experience shows that cross-border cooperation in MSP delivers real cost reductions[49]. Cross-border cooperation can help provide corridors for regional energy market integration. Offshore wind energy grid infrastructures will enable the participating Member States to trade their electricity from different energy sources. Cooperation on MSP can facilitate the alignment of timing and the sharing of intentions concerning planning of energy infrastructures.

New management measures in one Member State may also have an impact on navigation patterns and safety in another one. Early cross-border consultation allows sharing best practices and gathering information to be considered in national plans.

By setting a common European framework for MSP, the Directive helps provide a more coherent approach to the timing of MSP development. It also helps to manage cumulative cross-border impacts and data sharing.

Data

Data collection represents important costs in the development of offshore projects. Collecting background data and information in the development and consent phase can cost over €19 million for a wind farm of 500 MW. The data collected include environmental surveys, coastal process surveys, meteorological surveys, seabed surveys, as well as data collected through Marine Strategy Framework Directive Monitoring, Common Fisheries Policy data collection, Strategic Environmental Assessment and Environmental Impact Assessment[51]. Maritime spatial planning can help reduce these costs through better data management. Once the plan is in place and the different areas have been attributed to specific uses, exploration costs will be more limited. The involvement of all stakeholders in planning also increases the availability of data between stakeholders. Article 10 of the MSP Directive requires Member States to organise the use of the best available data and to decide how to share information. The development of common standards for data format would facilitate such sharing of data across sectors and borders.

MASPNOSE: cross-border cooperation on MSP in the Thornton Bank[50]

The MASPNOSE project (2010-2012) was initiated as a preparatory action for the development of Maritime Spatial Planning in the North Sea. The aim of the project was to facilitate concrete cross-border cooperation between neighbouring Member States.

The Thornton Bank between Belgium and The Netherlands was one of the areas identified where increased cross-border cooperation could be beneficial. Prior to the project, the two countries had different visions for the development of the Thornton Bank. Belgium had identified the area for the development of renewable energy.

The MASPNOSE project increased informal cross-border cooperation between governmental stakeholders in order to find common development objectives. Different economic scenarios with environmental benefits have been developed and both countries identified common priorities for the area.

49. South Baltic OFF.E.R (2013) Offshore Wind Energy In the South Baltic Region- Challenges & Opportunities.
50. MASPNOSE (2010-2012)
51. The Crown Estate and BVG associates (2010) A guide to an Offshore Wind Farm

HOW TO OBTAIN EU PUBLICATIONS

Free publications:

- one copy:
  via EU Bookshop (http://bookshop.europa.eu);

- more than one copy or posters/maps:
  from the European Union's representations (http://ec.europa.eu/represent_en.htm);
  from the delegations in non-EU countries (http://eeas.europa.eu/delegations/index_en.htm);
  by contacting the Europe Direct service (http://europa.eu/europedirect/index_en.htm) or
  calling 00 800 6 7 8 9 10 11 (freephone number from anywhere in the EU) (*).

(*) The information given is free, as are most calls (though some operators, phone boxes or hotels may charge you).

Priced publications:

- via EU Bookshop (http://bookshop.europa.eu).

Priced subscriptions:

- via one of the sales agents of the Publications Office of the European Union (http://publications.europa.eu/others/agents/index_en.htm).

KL-04-15-710-EN-C

Publications Office

ISBN 978-92-79-52100-3
doi:10.2771/32493